MASAM

CATALOGUE OF SPECIAL CUTTING TOOLS

2019

ABOUT COMPANY MASAM

The beginning in the field of regrinding of cutting tools dates back to 1998.

After the very beginnings, company MASAM s.r.o. was founded in 2001. Its primary focus was cutting tools regrinding. In a short period requirements and customer expectations increased, and consequently it was necessary to reconsider the focus and plans for the future in terms of investment and development of the company. During the years 2001-2006 the company invested in development through the purchase of new CNC technologies, which allowed us to provide not only services but also the production of cutting tools. This has resulted in the expansion of our production. We supplemented technology, construction, entry and exit checks. For full qualitatively managed processes in the company, during this period we introduced an information management system and certification according to ISO 9001:2008. In 2006, the entire company moved into a newly built premises.

Since 2006 the company has experienced the next period of development and expansion. First there was just an idea of expanding the company with the machining division. We were able to test the cutting tools we produced and, of course, also use them for our machining processes needs. During the years 2006 – 2009 it was decided to extend MASAM s.r.o. by two divisions: The Manufacture and Regrinding of Cutting Tools Division and the Machining, and Stamping Tool Division. We started expanding our commercial department, aimed at discovering new markets and new customers for both divisions.

In 2013, the new manufacturing plant in the Vráble industrial park was completed. It is a modern hall, which offers the perfect base for further development. Our goal is to have the most modern machinery permitting us to meet the most demanding requirements of our customers.

This catalogue offers a basic overview of the production portfolio of the production and sharpening of the cutting tool division.

Lloyd's Register

Certifikát

Potvrdzujeme, že systém manažérstva spoločnosti:

MASAM s.r.o.

Parkova 75, 952 01 Vráble, Slovensko

bol schválený spoločnosťou LRQA podľa nasledujúcich štandardov:

AS 9100D (technically equivalent to EN 9100:2018 and JISQ 9100:2016) |
ISO 9001:2015

Táto certifikácia bola vykonaná v súlade s požiadavkami EN 5104-001:2013
Lloyd's Register Quality Assurance je akreditovaný podľa schémy IAQG ICOP

Certifikačná štruktúra - Single

P.G. Cornelissen - Area Manager North Europe

Vystavené v: Lloyd's Register Quality Assurance Limited

Certifikát vystavený: 20. september 2016
Dátum revízie: 14. august 2018
Platnosť certifikátu do: 19. september 2019
Identifikačné číslo certifikátu: 10122864

Prvý certifikát vystavený:
AS 9100 20. september 2016
ISO 9001 29. jún 2016

Číslo zmluvy: AS 9100 - 0051625 / ISO 9001 - 0051627

Rozsah certifikácie je uplatnený na:
Návrh a vývoj, výroba rezného náradia, výroba a montáž lisovacích nástrojov a výrobných prípravkov, výroba strojných dielov a strojných zariadení

UKAS
001

iaqg

The production and regrinding of cutting tools division is focused on:

- regrinding of cutting tools
- design and construction according to customer specification
- production of standard and special cutting tools
- final inspection and quality protocol according to AS9100D

CUTTING TOOLS SERVICE

After the initial inspection and assigned barcode the particular contract is included in the production process. Production takes place at the 5-axis CNC grinding machines from the companies ISOG, Amada and Reinecker. An inspection is performed on measuring instruments from the Zoller company.

DESIGN AND CONSTRUCTION

After obtaining all the necessary input information from the customer a 3D model is made in the CATIA V5 R24 system. The design, along with the 3D simulation of the machining process, is consulted with the customer and then, after its approval, the processed documentation is released to manufacturing.

PRODUCTION OF STANDARD AND SPECIAL CUTTING TOOLS

After finalizing the production documentation the processed and simulated programs are released to manufacturing for programming the CNC grinder. The manufacturing and inspection is performed in accordance with the AS 9100 standard. Part of the production is programs and protocols designed for the inspection and regrinding of cutting tools produced by us. If the production concerns specialties designed for demanding applications, we are able to test the tool with the customer. The advantage is the quick tuning of geometry for a specific application.

APPLICATION SOLUTIONS

The produced cutting tools are delivered to our customers with application list that contain specific cutting conditions designed for a particular manufacturing process.

FINAL CONTROL

All processes are performed in accordance with the standard AS 9100.

1 MARKING OF MASAM CUTTING TOOLS

Marking for the material of the cutting tools for which material it is inteded is in accordance with the ISO standard at MASAM. Basic information before special cutting tool designin is machined material. When quoting the cutting tool, the customer will indicate the type of the material he wants to machine. The design of the tool begins with the choice of a suitable grade of solid carbide based on the material properties of individual carbides and machined material for each use. In addition, the most suitable coating and geometry of the cutting tools are designed for the application that the MASAM special cutting tools became extremely productive.

P	M	K	N	S	H
STEEL	STAINLESS STEEL	CAST IRON	NON-FERROUS METALS	HEAT RESISTANT SUPER ALLOYS	HARDENED MATERIALS

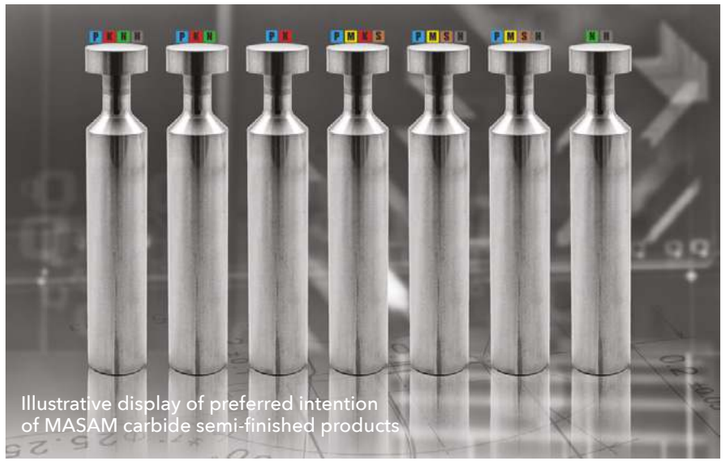
Illustrative display of preferred intention of MASAM carbide semi-finished products

MASAM provides a solution for all ISO groups of machined materials in the seven types of solid carbide bars.

Labeling of produced MASAM tools in a commonly provided standard is shown below. Our customers can mark their tools according to their own requirements, where the latest production number and logo are always assigned by MASAM.

2 SPECIAL MONOLIT SOLID CARBIDE CUTTING TOOLS

HOLEMAKING

In the below mentioned summary overview of drilling tools, some selected implemented projects are depicted. In the drilling tool offer, you can find and order standard types of drills, center drills, countersinks and combined drills, as well as special types of these tools. The company focuses in particular on special cutting tools, so in case you don't find a tool matching your needs in our catalogue, you can simply approach Masam company with your required input information, where we consequently create a design for approval.

D, D1, D2 ....Dn: The individual diameters of the stepped drill are designed according to the customer's requirements on the basis of the drawing documentation. The beginning of dimensioning from the tooltip with value D. Maximum diameter of the tool is Dmax = 40 mm.

L, L1, L2 ....Ln: the individual lengths of the cutting parts of the drill bit are designed according to the customer's needs based on the drawing documentation. The beginning of dimensioning from the tool-tip with value L - total length of the tool. Maximum tool length is Lmax = 250 mm.

TYPES OF COATING:

1. TiN + AlTiN + Si
2. TiN + AlTiN + CrAlSiN
3. TiAlSiN
4. TiAlN – AlTiN
5. CrAlSiN
6. TiN
7. TiCN
8. TiSiN
9. DLC
10. AlCrBN

Coating is proposed based on the mechanical properties of the machined material and the production technology. With the standard proposed coatings, we can offer other types of coatings, according to the customer's needs. More about individual coatings can be found in **chapter 4.**

Cutting conditions: Are included in the application list that are provided with the tool to our customers for a specific use (Chapter 5).

2.1 **STANDARD DRILLS**

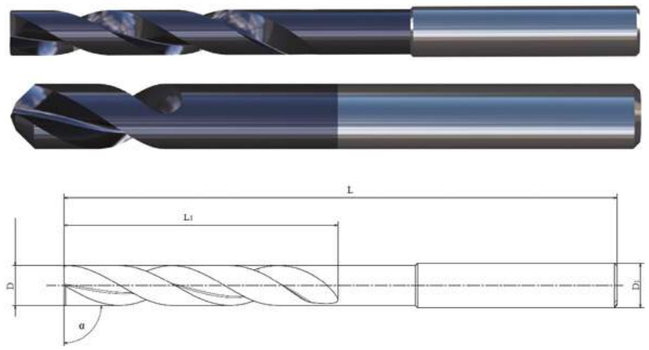

With the standard types of drilling tools we offer various models of the tooltip.

2.2 **STEP DRILLS**

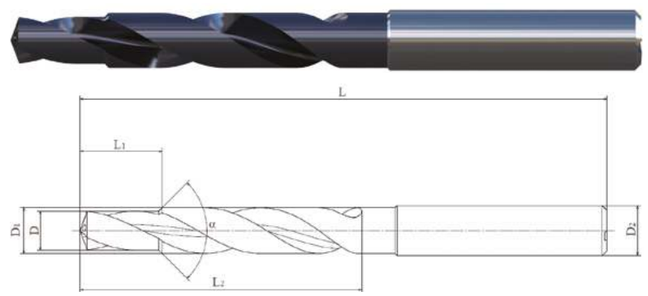

The number of steps and the relevant lengths and diameters of the step drill tool may vary up to the value Dmax, Lmax.

The main advantage of the stepped drill, which is created on the basis of the customer specification are depicted in the pictures below.

STANDARD APPLICATION **SPECIFIC APPLICATION**

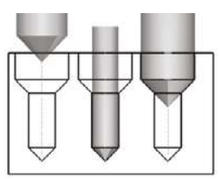

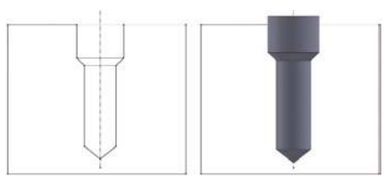

With the standard application it is necessary to use several types of cutting tools and the corresponding number of tool holders, increasing with the number of drill steps. The machining time therefore rises e.g. by changing the tools.

2.3 **CENTER DRILLS**

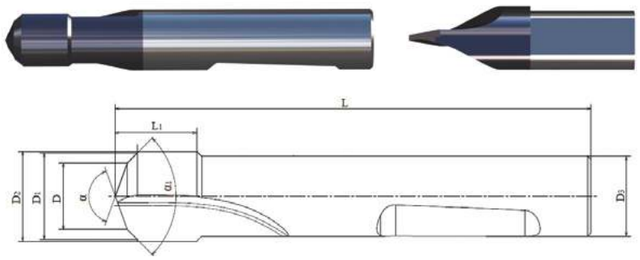

Wide offer of standardized drills, as well as specialized drills according to the customer's needs.

2.4 **COUNTERSINKS**

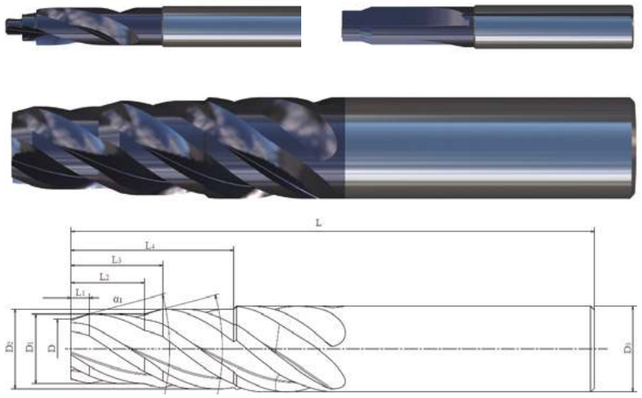

Various types of drilling tools for recessing into D40 and L250.

2.5 **COMBINED DRILLS**

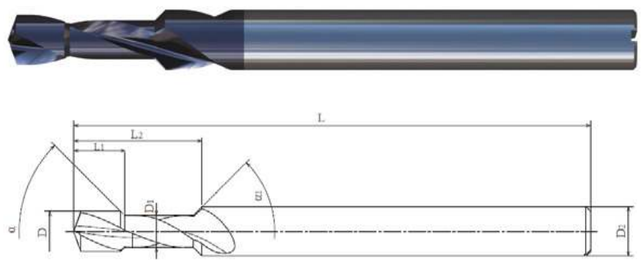

Combined drilling tools function as a composite cutting tool, for example drilling+side milling, drilling + reaming. Combining tools allows to operate various technological functions (drilling, engraving, milling etc.) with a single cutting tool.

2.6 STANDARD REAMERS

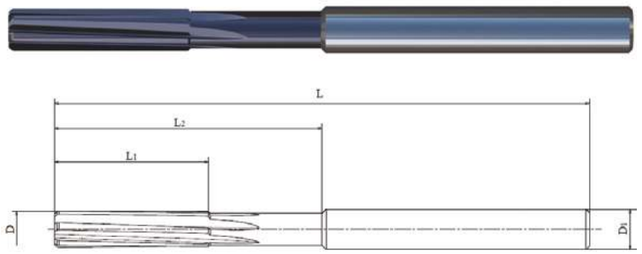

2.7 STEP REAMERS

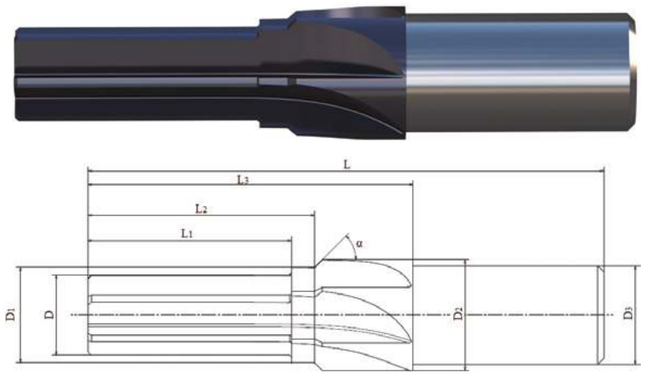

2.8 CYLINDRICAL END MILLS

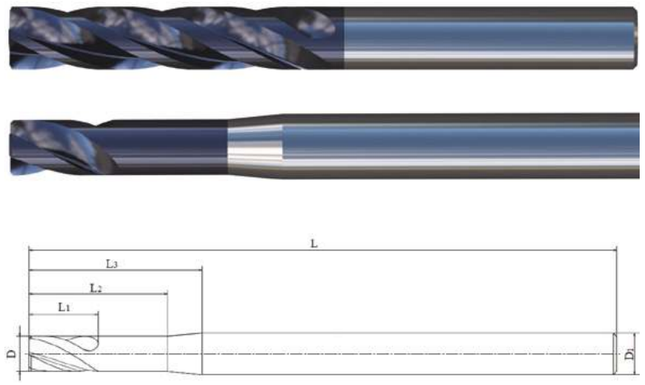

2.9 CONICAL END MILLS

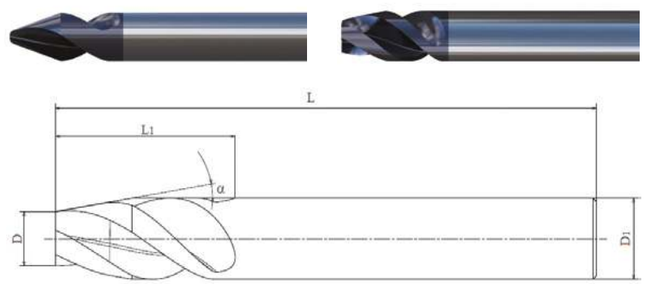

2.10 SPHERICAL AND BALLNOSE END MILLS

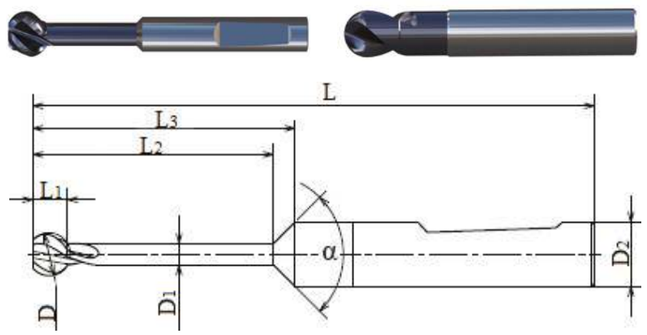

MILLING

Milling tools offered by our company enjoy great flexibility in shapes and types of shank solid carbide cutter. At each point, it is possible to illustrate the profiles of the milling tool. In case your requested tool profile is not listed in this catalogue, we are ready to process a tool design specially for you.

D, D1, D2 ... .Dn: The individual diameters of the milling tools are designed according to the customer's requirements based on the drawing documentation. The beginning of dimensioning from the tooltip with value D. Maximum tool diameter Dmax = 40 mm.

L, L1, L2 ... .Ln: The individual lengths of the tool parts of the milling tool are designed according to the customer's requirements based on the drawing documentation. The beginning of dimensioning from the tooltip with value L - total length of the tool. Maximum tool length Lmax = 250 mm.

TYPES OF COATING:

1. TiN + AlTiN + Si
2. TiN + AlTiN + CrAlSiN
3. TiAlSiN
4. TiAlN – AlTiN
5. CrAlSiN
6. TiN
7. TiCN
8. TiSiN
9. DLC
10. AlCrBN

Coating is proposed based on the mechanical properties of the machined material and the production technology. With the standard proposed coatings we can offer other types of coatings, according to the customer's needs. More about individual coatings can be found in **chapter 4.**

Cutting conditions: Are included in the user manual that are provided with the tool to our customers for a specific use (Chapter 5).

2.11 **SHAPE END MILLS**

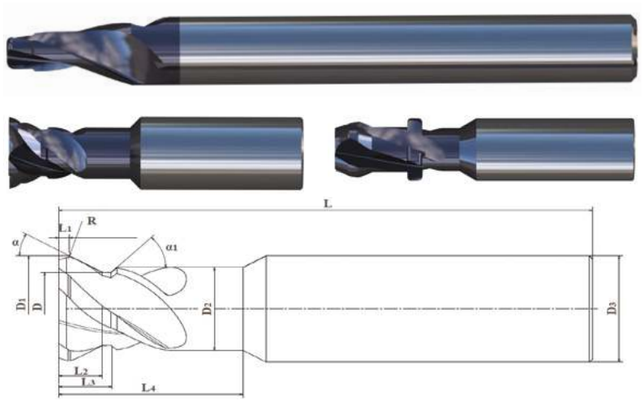

Above listed illustrations present some of the implemented projects. We create the form milling cutter specially for the customer according to his needs.

2.12 **DOVETAIL END MILLS**

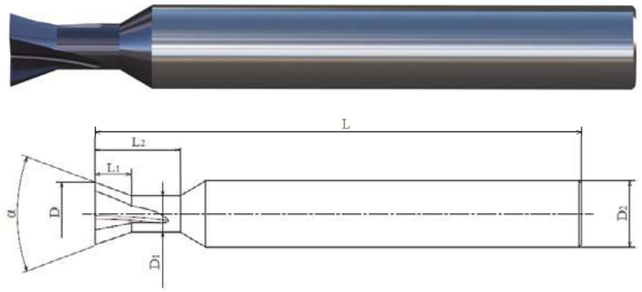

2.13 **T-SLOT END MILLS**

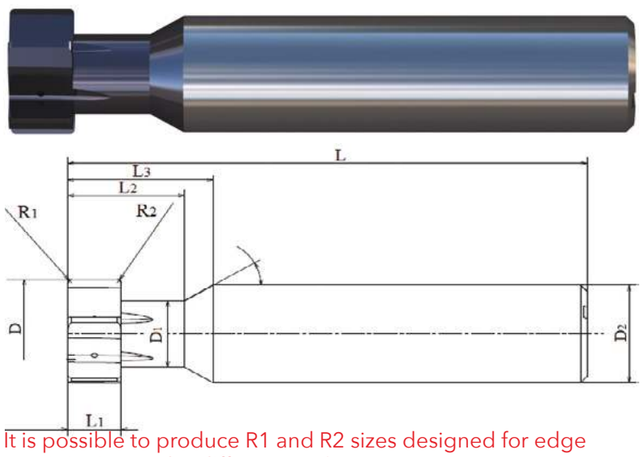

It is possible to produce R1 and R2 sizes designed for edge precipitation under different angles.

2.14 **TOROIDAL END MILLS**

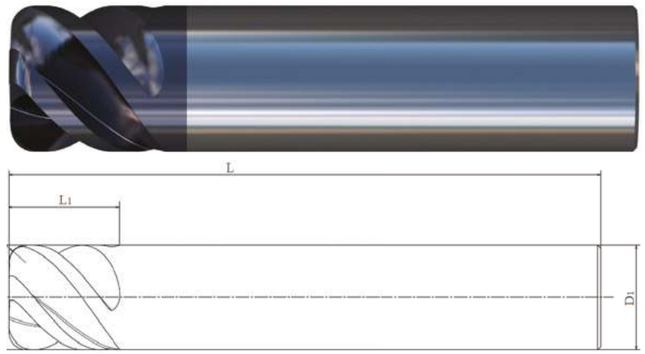

2.15 **ANGLE END MILLS**

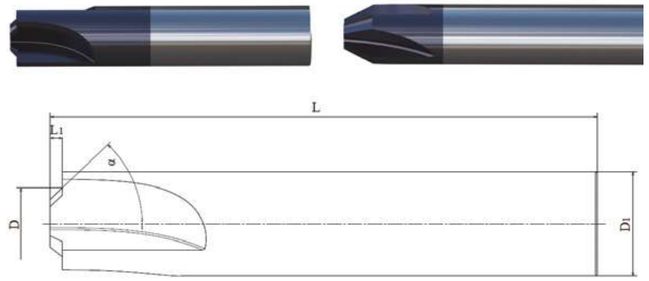

It is possible to manufacture an angular cutter for a production of a lower cut or as a combined tool (creating a lower and upper cut on the workpiece)

2.16 **RADIUS END MILLS**

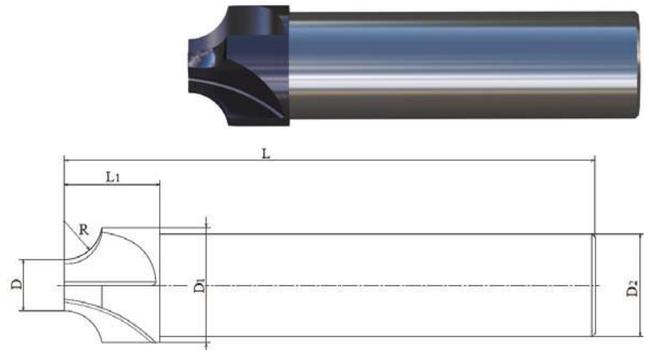

2.17 MODULAR END MILLS

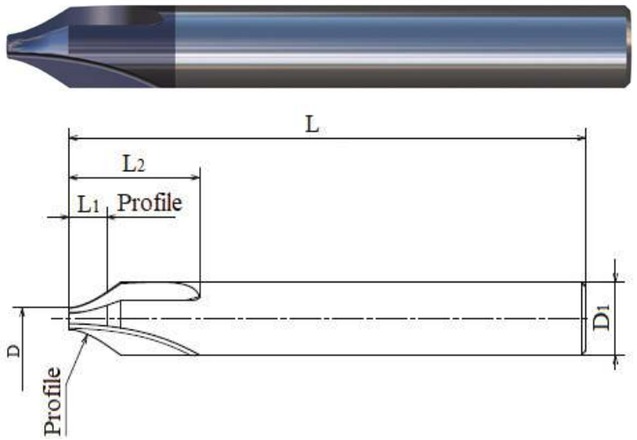

Profil nástroja je vyrobený podľa platných noriem, resp. podľa požiadavky zákazníka.

2.18 MONOLITHIC MILLING HEADS

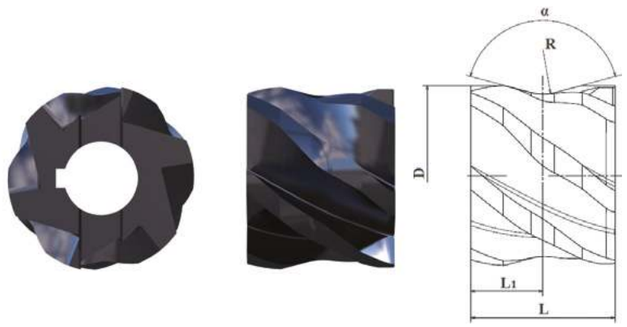

2.19 DISC MILLING CUTTERS

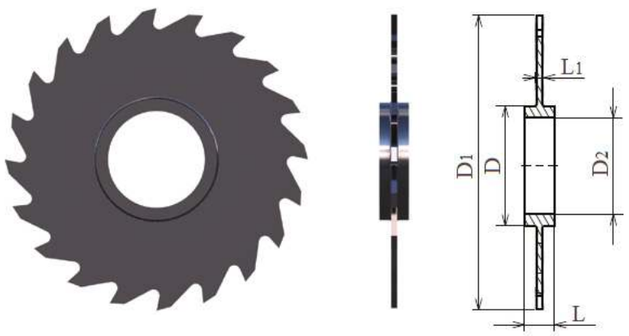

2.20 THREAD MILLING CUTTERS

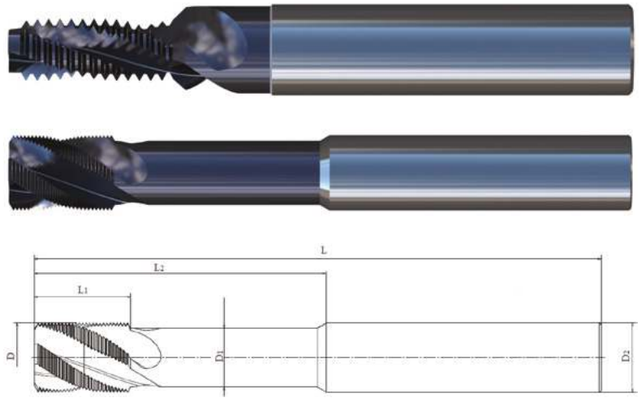

TURNING

MASAM also offers a special category of monolithic turning tools in its production of special cutting tools. Tools can be designed as solid carbide, possibly with an additional insert depending on the tool application and its possible regrinding.

2.21 SHAPE TURNING TOOLS

Shape turning tools, internal – on the left , externa – on the right

MASAM's product range includes also shape turning tools for specific customer requirements. In this category, we offer shape turning tools for internal and external turning. Turning tools are designed on the basis of customer-specific drawings for a specific shape on the workpiece that they require using of turning tool with special shape.

3 SPECIAL CUTTING TOOLS WITH CARBIDE INSERTS

BROACHING TOOLS

Broaching is productive machining method designed to produce precise circular and shape holes and slots, internal teeth or precise surfaces. This technology is mainly applied in serial and mass production when precision machining is required, especially for odd shapes. The broach tool contains three distinct sections: one for roughing, another for semi-finishing, and the final one for finishing. Accuracy of IT 6 and a surface roughness value Ra = 0.4 μm can be achieved.

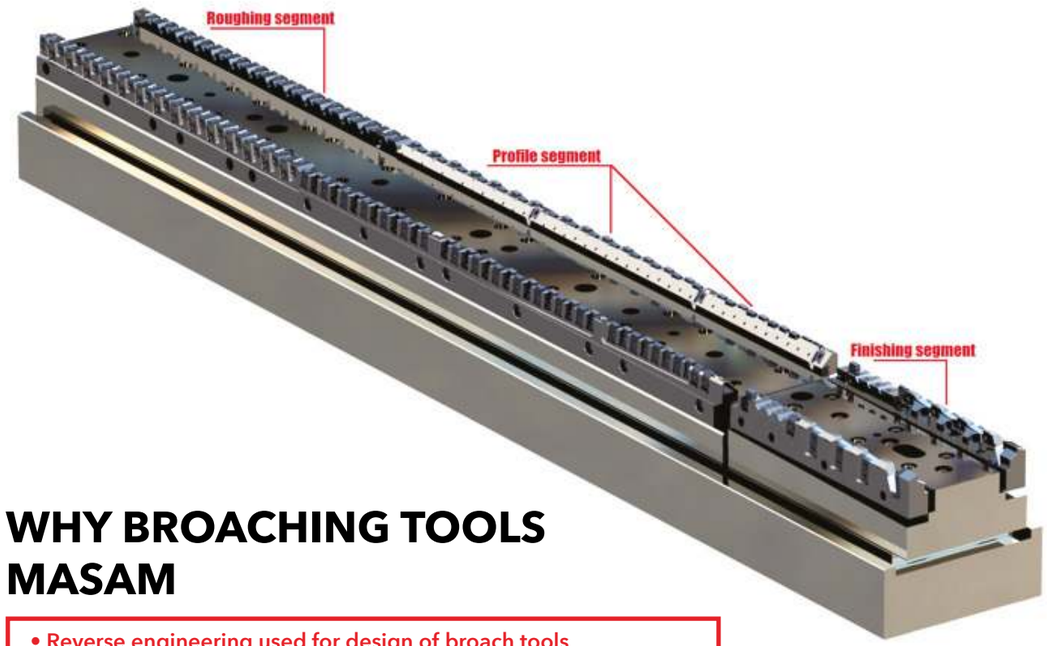

WHY BROACHING TOOLS MASAM

- **Reverse engineering used for design of broach tools**

- analyse of tools deformations
- new tool types design
- complete 3D documentation
- exact overall shapes measuring

- **Application support directly at customer's production site**
- **Supporting documents and analysis making**

- creation of manuals with exact places specification for quick controlling and inserts exchange
- technological manual for accelerating deployment into production
- downtime reduction, overall optimization of technological process and tools implementation

A comprehensive tool is built from a number of technical solutions that MASAM provides to its customers. Obviously, each final shape requires a different number of segments as well as their specific design. For particullar applications broach tool is only finishing pre-machined part. For other applications complete shape is machined by more tool segments assembled in to one broach tool.

For this reason, segments of broach tools are divided into three groups:

- Rough broaching segments
- Semi-finishing segments which perform a substantially semi-finishing operation
- Finishing segments as the most recent solution is to finalize and calibrate the final workpiece shape.

3.1 ROUGHING BROACHING TOOLS

3.2 PROFILE AND SEMI-FINISHING BROACHING TOOLS

3.3 FINISHING AND CALLIBRATION BROACHING TOOLS

4 COATINGS

Due to increasing demands on product quality and the speed of development of new technologies, the machining process also requires constant improvement. One of the main causes in the improvement process are cutting materials that can greatly enhance machining efficiency. However, we can not forget other very important aspects of cutting tools such as suitable geometry and cutting conditions. Last but not least, it should be stressed that today's cutting materials without the application of suitable coatings would not be suitable for most of the current applications.

Coated sintered carbides combine good substrate and coating features with the purpose of improving tool cutting properties and wear resistance. Masam offers its customers a wide range of coatings for cutting tools. It is very important to choose and apply a coating that will be the optimal solution for the tool's desired function during individual technological operations and machining technologies. Our company, in the customer application solution for special cutting tools, will propose the use of a coating based on all input criteria in the given process. In particular, the thickness, hardness, friction coefficient, adhesion, and their resistance to oxidation and abrasion are taken into account in the application of the coating.

OUR OFFER OF THE PVD COATINGS:

1. TiN + AlTiN + Si

1. TiN + AlTiN + Si – the coating consists of three layers, each component having specific properties. The use of the TiN layer prevents adhesion wear, which is used together with the AlTiN layer due to its high toughness and hardness. The last component of the coating is an extremely hard nanocomposite Si layer. The characteristic color of the coating is gold.

Application of TiN + AlTiN + Si – This coating application can be seen with high alloyed steels with hardness above 60 HRC. Use of this combination is also suitable for machining of hard-to-machine materials. The coating is also used for higher cutting speeds and dry machining.

2. TiN + AlTiN + CrAlSiN

2. TiN + AlTiN + CrAlSiN – It is a PVD coating consisting of three basic layers. The first layer is in direct contact with the tool and is made of titanium nitride (TiN). The second layer of the coating contains AlTiN and the last layer is the nanocomposite layer CrAlSiN. The final nanocomposite layer has very high hardness and resistance to penetration of very small portions of machined material. The middle layer of AlTiN has excellent toughness. The characteristic color of the coating is blue.

Application of TiN + AlTiN + CrAlSiN - This type of coating is recommended for machining stainless steel and hardened steels. The use is focused on very demanding applications in the machining of hard-to-machine materials.

3. TiAlSiN

3. TiAlSiN – The nanocomposite coating of anthracite color excels especially for its extreme oxidation resistance, wear resistance and high heat resistance. The TiAlSiN coating has hardness of about 3400 HV and the maximum working temperature of 900 ° C.

Application of TiAlSiN represents a new direction for dry, hard, high-speed machining and machining of highly abrasive materials. The TiAlSiN coating is considered to be relatively versatile and it is used for applications such as milling, drilling, reaming.

4. TiAlN - AlTiN

4. TiAlN – AlTiN – Nanolayer gradient coating consisting of a layer with a continuous change in composition with a high aluminum content. The maximum working temperature is approximately 800 ° C and the coating hardness is around 3000 HV. The difference between TiAlN and AlTiN is the percentage composition of the content of the element in the coating. The characteristic color of the coating is black - purple.

Application of TiAlN - AlTiN is very wide, especially due to the universal coating quality. It is suitable for stable sections during machining of abrasive materials for a wide range of technological operations such as milling, drilling, deep drilling, threading and reaming. Note: possibility of AlTiCN coating.

5. CrAlSiN

5. CrAlSiN – High-chromium-based nanocomposite coating with very good thermal resistance. This type of coating has significant oxidation resistance at high operating temperatures - 1000 ° C. The hardness of these coatings reaches relatively high values above 3500 HV.

Application of CrAlSiN is suitable for machining and drilling operations of materials that are prone to sticking on the tool while machining.

6. TiN

6. TiN – The standard TiN coating, due to its balanced properties, ranks among commonly used coatings. The advantage of the coating is in low affinity for metallic materials with which good chemical stability is associated. The hardness of the coating is about 2300 HV and the maximal working temperature is around 500 ° C. The coating color is gold.

Application of TiN coating is for machining iron-based materials during less demanding processes. Very frequent use of the coating is for rolling mills and drills.

7. TiCN

7. TiCN – gradient coating with low friction coefficient and very good toughness, resistance to wear even at high hardness at 3500 HV. The working temperature of the coating is 400 ° C. Characteristic color is blue - gray.

Application of TiCN coating is versatile and optimized for this purpose. The most common applications are for threading and milling. Note: In the category of multipurpose coatings, we offer the possibility of TiCrN, TiAlCrN, CrN, ZrN.

8. TiSiN

8. TiSiN – Multilayer nanocomposite coating with hardness of approximately 3500 HV and the maximal temperature of 1100 ° C. The properties of the coating are aimed at protecting the cutting edge from heat transfer, oxidation and abrasion.

Application of TiSiN coating is for machining very hard and abrasive materials, e.g. Titanium. Also used for the manufacture of gears with carbide tools and dry finishing and semi-finishing milling.

9. DLC

9. DLC – (Diamond Like Carbon). The hardness of the coating for tetrahedral amorphous carbon is 5000 HV. It is characterized by a zero hydrogen content and the absence of macroparticles in the layer. The coating is characterized by an extremely low coefficient of friction. Advantages of the coating are in its application to geometrically more complicated tools, as well as maintaining the sharp geometry of the cutting edge.

Application of the DLC coating is mainly for non-ferrous materials. DLC is suitable for different technologies and materials such as: aluminum, carbon, copper, some grades of titanium, PCB boards, composites, plastics, epoxies, wood.

10. AlCrBN

10. AlCrBN – It is a very unique boron-containing coating that is prepared by the specific magnetron sputtering technology with deposition by low-voltage arc. This technology gives us the possibility to prepare coatings in very precise thickness with low friction coefficient.

Application usage coating AlCrBN is in a wide range of applications in the most demanding machining requiring high precision and surface quality.

COATING TESTING

Our company also tests the suitability of individual coatings for a particular use. For maximum use of cutting tools and to ensure maximum longevity, it is necessary to determine the optimal solution also in terms of the coating used.

Shown below, you can see testing of two coatings: **TiN + AlTiN + CrAlSiN and TiSiN** for a particular application in dry machining of carbon steel. Three contour machining strategies were compared. They were tested up to the determined wear criterion with roughness parameter **Ra = 1.6 µm.**

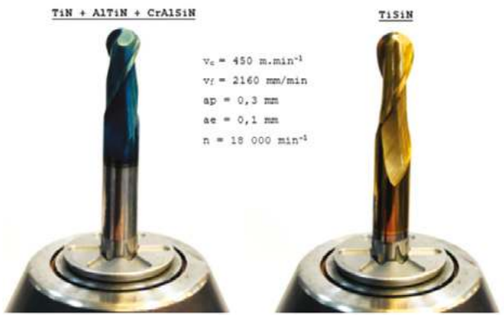

The figure below shows a graph of the results of individual coatings under different machining strategies. We can spot how the same durations differ in different strategies for different coatings. The results can be summarized as follows:
(strategy no. 1 272 min vs 160 min
strategy no. 2 160 min vs 85 min
strategy no. 3 95 min vs. 35 min),
where the first value is TiN + AlTiN + CrAlSiN.
The time comparison is based on the roughness criterion.

Surface roughness

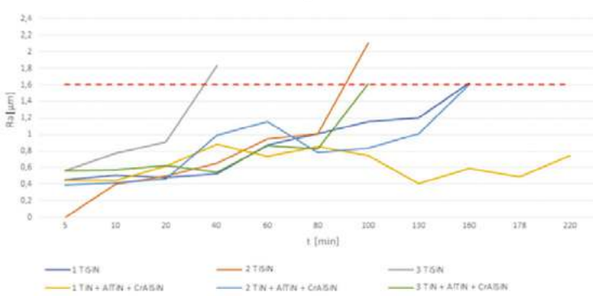

Figure below also shows an example of a measured wear parameter that closely correlates with the surface roughness achieved. In this case, maximum wear of the flank was measured. It is evident that the difference in roughness was caused by a loss of TiSiN coating from the surface of the tool under the given experimental conditions. Our task in this test was to find optimal conditions and use of the cutting tool. However, under other cutting conditions or machined materials, the results of the two coatings may be the exact opposite. Therefore, MASAM is always looking for the optimal solutions.

Our tools are provided with user manuals on request (chapter 5), specially designed with the tools for their use. The wear analysis of the cutting tool is carried out during the service of the tool at Masam. In this respect, we offer our customers the possibility to create reports that are designed to make better use of the tool and to increase their sustainability. Wear reports are described in detail in chapter 6.

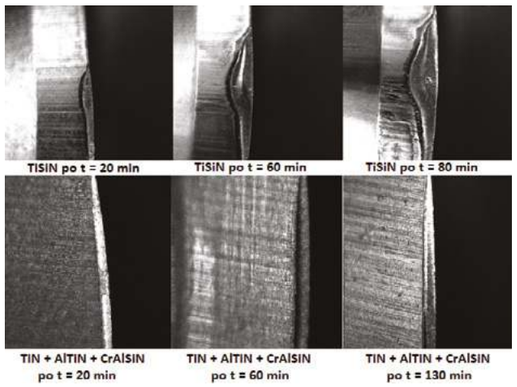

MEASURING DEVICE ZOLLER - CONTROL OF GEOMETRY AND WEAR OF CUTTING TOOLS

5 APPLICATION LIST

Application list of cutting tools are delivered to our customers for their specific use. Customers can choose from cutting speeds according to their current needs, naturally with our recommendation. For more demanding processes or shapes of the cutting tool, the application list are extended by a schematic process of production or by splitting the feed and cutting speed values. The user manual is also a description of the proposed coating for the machined material used and the technology. If the customer also defines the type of machine used, the application list also contains additional information about the machine (the method of clamping and unloading, the power, the adjustment of the cutting speeds based on the max. spindle speed, etc.).

In addition to the production of sintered carbide cutting tools, MASAM is also dedicated to their service. For this reason we check the wear of cutting edges with optical microscopes. In order to make better use of our tools, we also offer the possibility of customer status reports before sharpening (Chapter 6).

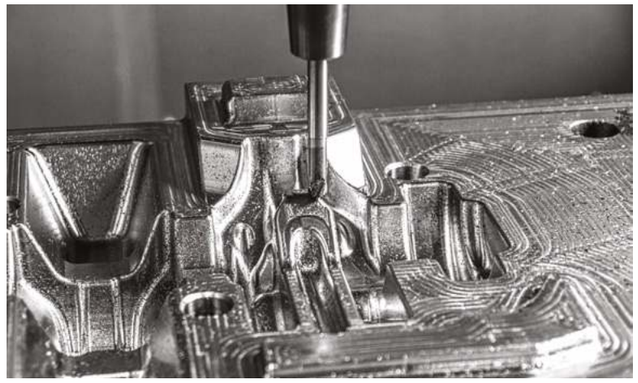

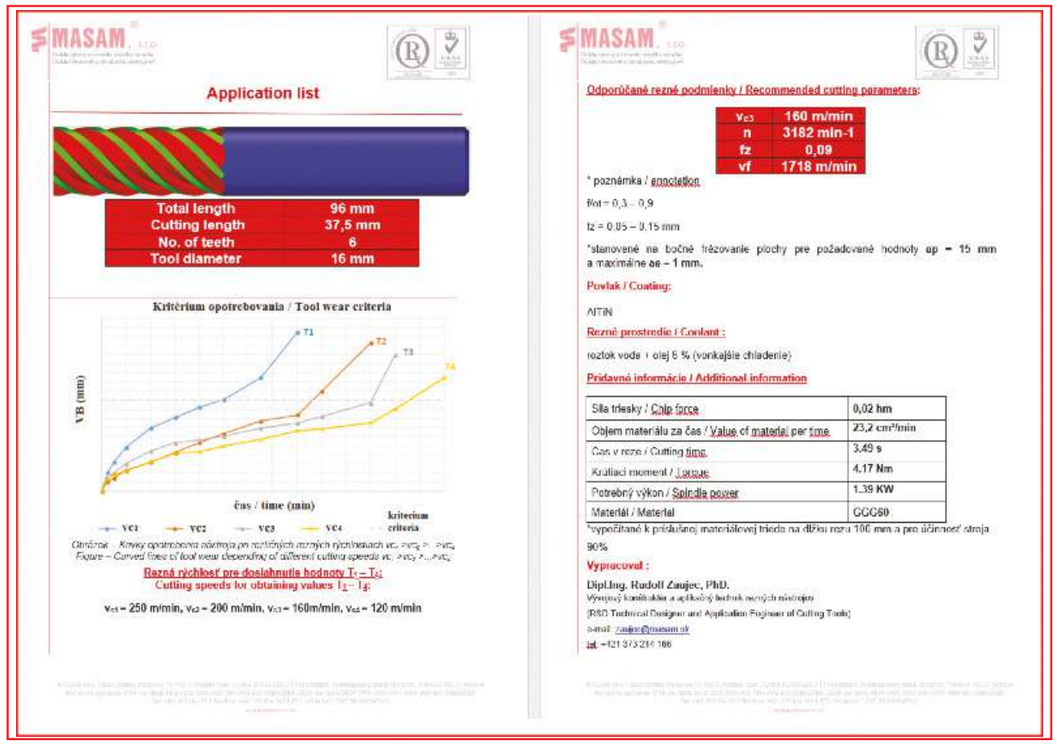

6 REPORT

An example of the customer report from drilling can be illustrated by figure below, supplemented by images of a worn drill on the flank. As is generally known, tool wear occurs in three bands. In cooperation with our customers, we determine the end of the tool's durability over the selected criterion. In this particular case, it was necessary to determine the end of linear wear and to prevent the transition to the accelerated wear band.

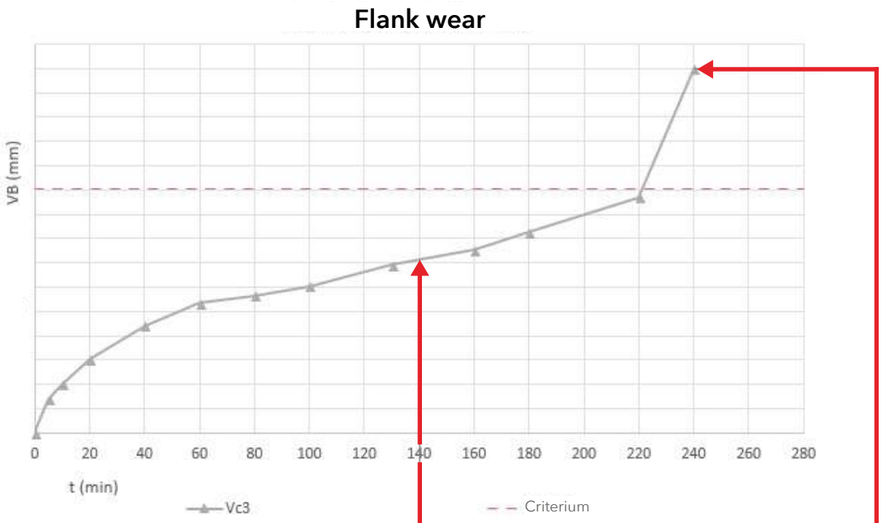

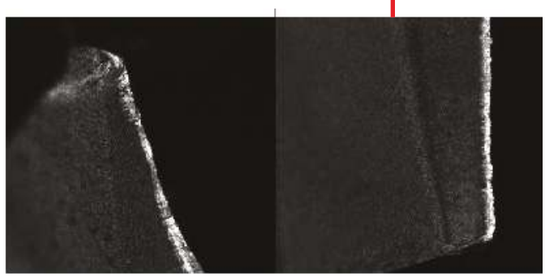

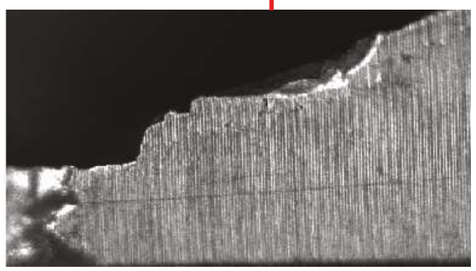

In this Figure, we can see the flank wear in two bands. During our experience, we often encounter both cases when requesting a tool sharpening. Removed tool after 140 minutes of cutting is, of course, less dangerous than the case on the right, where there is a risk of complete tool fracture. After a 140-minute removal, we still have a very long reserve of durability. The case of accelerated wear, where the cutting edge is significantly deformed after a short time, is very inefficient and dangerous. In this case, we gained 20 minutes of tool work until the removal, but we have lost durability of the tool's life because it was necessary to grind a larger part of the cutting edge. This argument is supported by the well-known formula for calculating the life expectancy **D = T. (n + 1)** where n is the number of tool regrinding and T is the tool life. To summarize, it is very easy to lose the tool life of 200 minutes for 20 minutes. Reporting the tool's status before regrinding is preventing this from happening. As a result of the reports to increase the lifetime of the tool is:

Treatment of cutting conditions
Changing tool worktime until the end of durability
Technology optimization (Chapter 7).

We provide reports to our customers as a result of testing the durability of cutting tools after various specific modifications. On the picture below its shown an example of a report from regular qualitative analyzes of carbide materials.

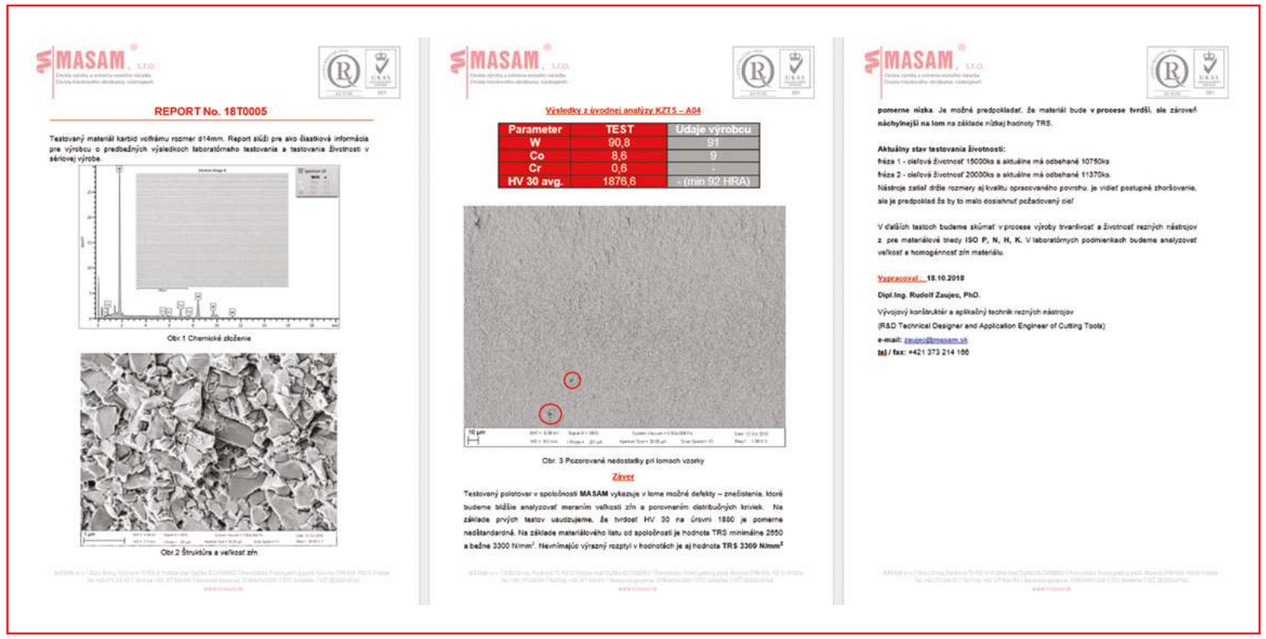

MASAM, s.r.o.

REPORT No. 18T0005

Testovaný materiál karbid volfrámu rozmer ø14mm. Report slúži pre ako čiastková informácia pre výrobcu o predbežných výsledkoch laboratórneho testovania a testovania životnosti v sériovej výrobe.

Obr.1 Chemické zloženie

Obr.2 Štruktúra a veľkosť zŕn

MASAM, s.r.o.

Výsledky z úvodnej analýzy KZTS – A04

Parameter	TEST	Udaje vyrobcu
W	90,8	91
Co	8,6	9
Cr	0,6	
HV 30 avg.	1876,6	- (min 92 HRA)

Obr. 3 Pozorované nedostatky pri lomach vzorky

Záver

Testovaný polotovar v spoločnosti MASAM vykazuje v lome možné defekty – znečistenia, ktoré budeme bližšie analyzovať meraním veľkosti zŕn a porovnaním distribučných kriviek. Na základe prvých testov usudzujeme, že tvrdosť HV 30 na úrovni 1880 je pomerne nadštandardná. Na základe materiálového listu od spoločnosti je hodnota TRS minimálne 2650 a bežne 3300 N/mm². Nevnímajúc výrazný rozptyl v hodnotách je aj hodnota TRS 3300 N/mm² pomerne nízka. Je možné predpokladať, že materiál bude v procese tvrdší, ale zároveň náchylnejší na lom na základe nízkej hodnoty TRS.

MASAM, s.r.o.

Aktuálny stav testovania Životnosti:
fréza 1 - cieľová životnosť 15000ks a aktuálne má odobehané 10750ks
fréza 2 - cieľová životnosť 20000ks a aktuálne má odobehané 11370ks.
Nástroje zatiaľ držia rozmery aj kvalitu opracovaného povrchu, je vidieť postupné zhoršovanie, ale je predpoklad že by to malo dosiahnuť požadovaný cieľ

V ďalších testoch budeme skúmať v procese výroby trvanlivosť a životnosť rezných nástrojov z pre materiálové triedy ISO P, N, H, K. V laboratórnych podmienkach budeme analyzovať veľkosť a homogénnosť zŕn materiálu.

Vypracoval: 18.10.2018

Dipl.Ing. Rudolf Zsujes, PhD.

Vývojový konštruktér a aplikačný technik rezných nástrojov
(R&D Technical Designer and Application Engineer of Cutting Tools)
e-mail: zsujes@masam.sk
tel / fax: +421 373 214 166

Example of report from regullar carbide test.

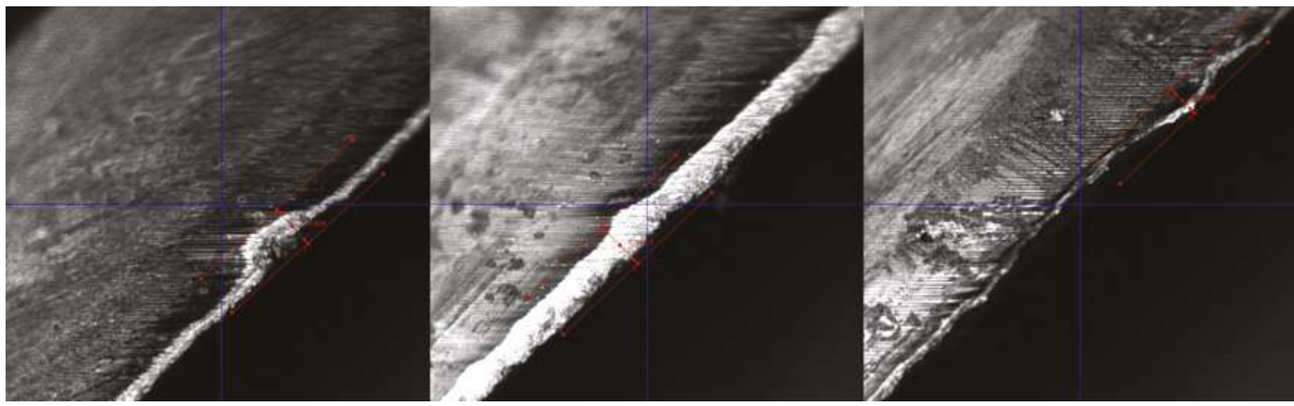

Example of measuring of cutting edge wear. This one is from report used for tool life testing.

7 TECHNOLOGY OPTIMIZATION

Development of the cutting tool properties as well as cus-tomer oriented access to a particular application is a priority at MASAM.

Based on these facts, we are successful in optimizing and designing custom manufacturing technology and appropriate cutting tools. As an example, we can show you some optimizations that consist of:

Design of a combined tool eg. drilling + reaming, etc.,

Replacement of a standard and commonly used solution with a special solution where we design a tool with MASAM geometry - designed for spe-cific customer conditions.

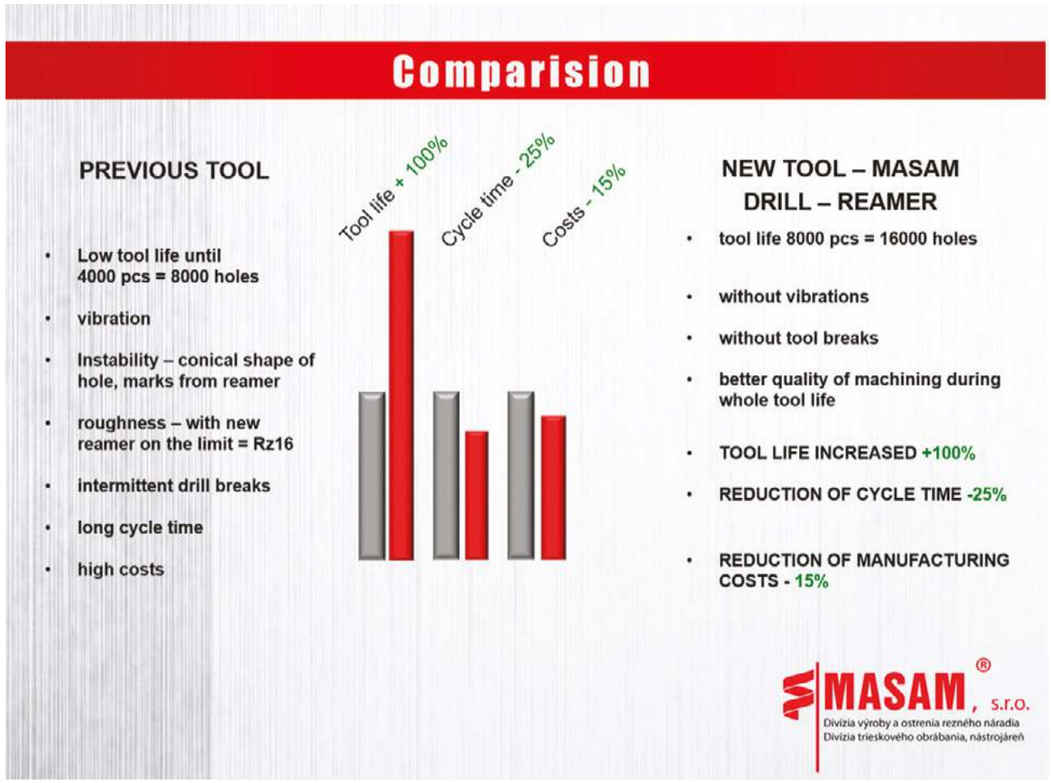

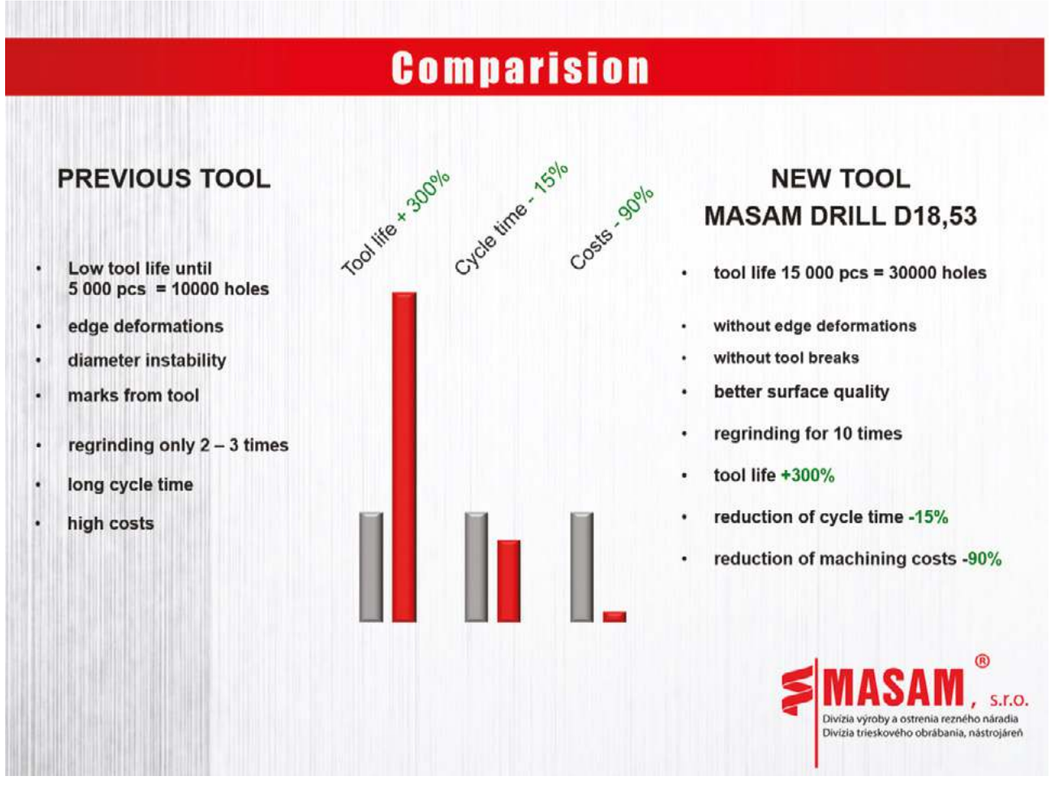

IN CASE OF ANY **QUESTIONS AND REQUIREMENTS**

If the catalog of special cutting tools addresses you, do not hesitate to contact us. To produce a design of the cutting tool, it is sufficient to provide the manufactured shape on an image in pdf. or any CAD model format. Of course, it is possible to send a specification even if you already have drawing documentation of a particular tool. This variation of the documentation is subsequently processed by our development - design department, which suggests a suitable combination of cutting geometry, coatings and application solution to the process.

If you know the required dimensions of the cutting tool whose dimensioning principle is shown in each section of the offered tools, you can send a query based on our Tool Forms. The forms are freely available on the website **www.masam.sk** or we can send them back to you by an e-mail request.

SIMULATION

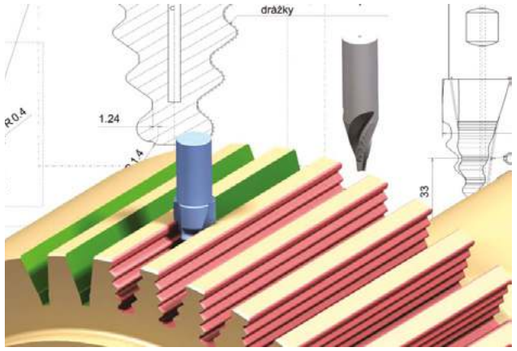

CALCULATION

$$v_c = \frac{D \cdot \pi \cdot n}{1000} \qquad f_z = \frac{v_f}{z_{eff} \cdot n} \qquad h_m = f_z \cdot \sqrt{\frac{a_e}{D}}$$

$$n = \frac{v_c \cdot 1000}{D \cdot \pi} \qquad f_n = \frac{v_f}{n} \qquad v_f = f_z \cdot z_{eff} \cdot n \qquad k_c = h_m^{-mc} \cdot k_{c1,1}$$

$$P_c = \frac{a_p \cdot a_e \cdot v_f \cdot k_c}{60 \cdot 10^6} \qquad Q = \frac{a_e \cdot a_p \cdot v_f}{1000} \qquad P_{mot} = \frac{P_c}{\eta}$$

CUSTOMER REQUEST

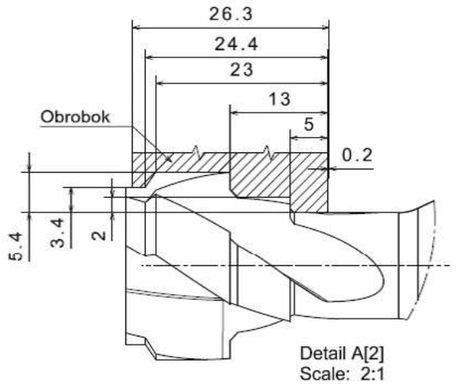

TOOL DESIGN

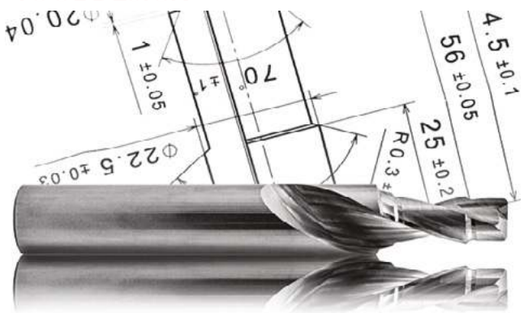

TESTING

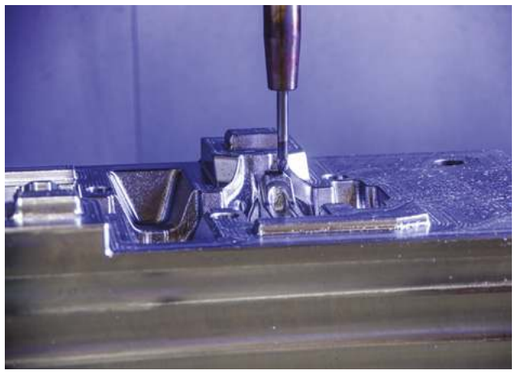

MASAM COMPLEX SOLUTION

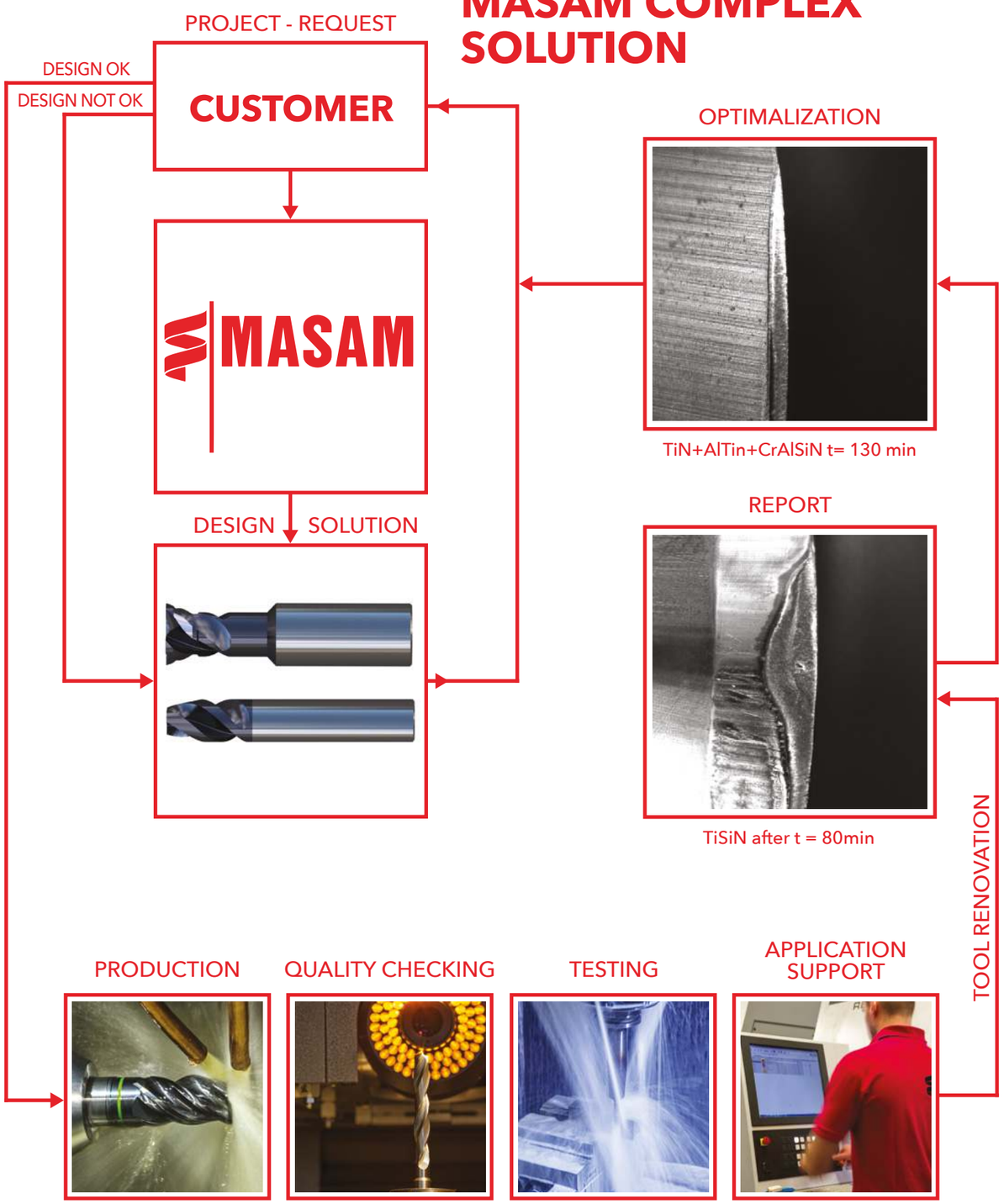

company address

MASAM, s.r.o
Parková 75
952 01 VRÁBLE,
časť Dyčka

office and production

Priemyselný park Vráble
Hlavná ulica 1798/60A
952 01 Vráble

Tel: +421 37 3214111
Mobil: +421 907 573 307
E-mail: masam@masam.sk